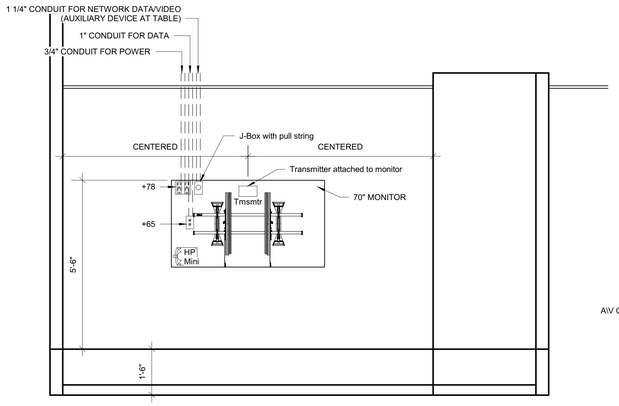

MEDIUM CONFERENCE ROOM WITH 70" MONITOR

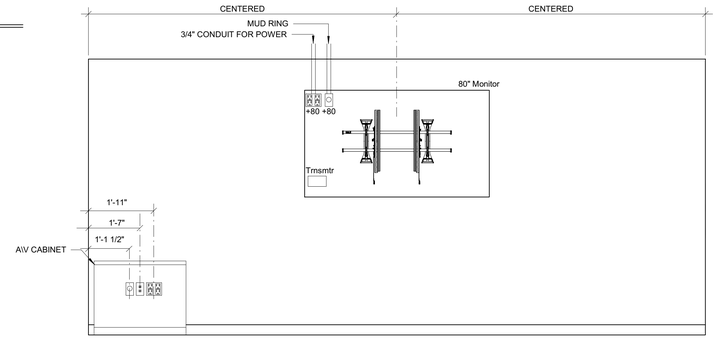

TEAM ROOM WITH MONITOR

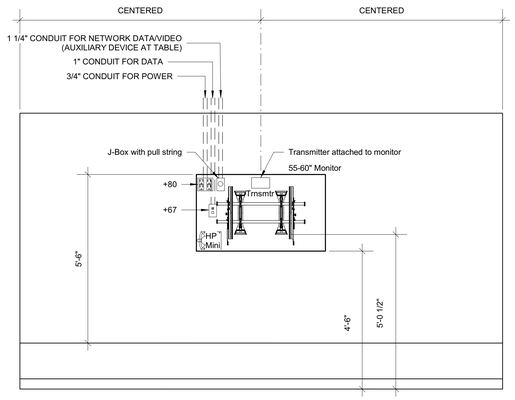

SMALL CONFERENCE ROOM WITH 55"-60" MONITOR

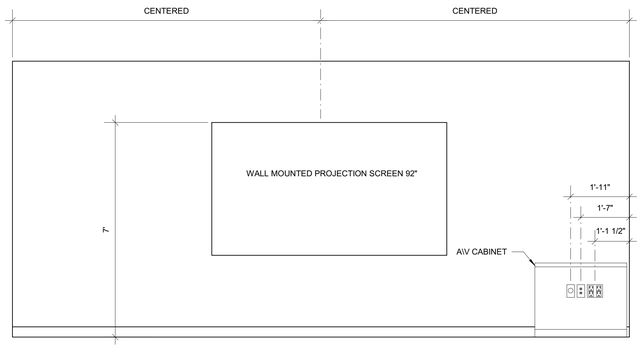

LARGE CONFERENCE ROOM WITH PROJECTION SCREEN

1 TV MONITOR MOUNTING DETAILS

E6-1-03 SCALE: N.T.S.

OPEN OFFICE AREA LIGHTING CONTROL SCHEDULE								
CONTROL ZONE (FLOOR-ZONE #)	ZONE DESCRIPTION	FIXTURE TYPE	LOCAL OVERRIDE/MANUAL CONTROL			TIME CLOCK*	DAYLIGHT HARVESTING	COMMENTS
			ON/OFF SWITCH	DIMMER SWITCH	OCC/VAC. SENSOR			
1-0	CONNECTION TRANSITION	P2	NO	NO	YES	YES	NO	OCCUPANCY SENSOR SHALL FUNCTION AFTER HOURS.
1-1 thru 1-9 (except 1-3)	OPEN OFFICE	A	YES	YES	NO	YES	NO	EACH ZONE SHALL HAVE ONE MASTER ON/OFF OVERRIDE SWITCH LOCATED WITHIN THE ZONE AND ONE DIMMER OVERRIDE SWITCH LOCATED IN THE NEAREST ELECTRICAL ROOM AS NOTED ON PLANS.
1-3	COMMUNICATION CORRIDOR	P1	YES	YES	NO	YES	NO	THIS ZONE SHALL HAVE ONE MASTER ON/OFF OVERRIDE SWITCH LOCATED WITHIN THE ZONE AND ONE DIMMER OVERRIDE SWITCH LOCATED IN THE WEST ELECTRICAL ROOM AS NOTED ON PLANS.
1-10 thru 1-50	OPEN OFFICE DAYLIGHTING	A	NO	NO	YES	YES	YES	DAYLIGHTING SENSOR SHALL FUNCTION AS A PHOTOCELL DURING THE NORMAL HOURS OF OPERATION AND AS AN OCCUPACNY SENSOR AFTER HOURS.
2-0	CONNECTION TRANSITION	P2	NO	NO	YES	YES	NO	OCCUPANCY SENSOR SHALL FUNCTION AFTER HOURS.
2-1 thru 2-9 (except 2-3)	OPEN OFFICE	A	YES	YES	NO	YES	NO	EACH ZONE SHALL HAVE ONE MASTER ON/OFF OVERRIDE SWITCH LOCATED WITHIN THE ZONE AND ONE DIMMER OVERRIDE SWITCH LOCATED IN THE NEAREST ELECTRICAL ROOM AS NOTED ON PLANS.
2-3	COMMUNICATION CORRIDOR	P1	YES	YES	NO	YES	NO	THIS ZONE SHALL HAVE ONE MASTER ON/OFF OVERRIDE SWITCH LOCATED WITHIN THE ZONE AND ONE DIMMER OVERRIDE SWITCH LOCATED IN THE WEST AS NOTED ON PLANS.
2-10 thru 2-50	OPEN OFFICE DAYLIGHTING	A	NO	NO	YES	YES	YES	DAYLIGHTING SENSOR SHALL FUNCTION AS A PHOTOCELL DURING THE NORMAL HOURS OF OPERATION AND AS AN OCCUPACNY SENSOR AFTER HOURS.
3-0	CONNECTION TRANSITION	P2	NO	NO	YES	YES	NO	OCCUPANCY SENSOR SHALL FUNCTION AFTER HOURS.
3-1 thru 3-9 (except 3-3)	OPEN OFFICE	A	YES	YES	NO	YES	NO	EACH ZONE SHALL HAVE ONE MASTER ON/OFF OVERRIDE SWITCH LOCATED WITHIN THE ZONE AND ONE DIMMER OVERRIDE SWITCH LOCATED IN THE NEAREST ELECTRICAL ROOM AS NOTED ON PLANS.
3-3	COMMUNICATION CORRIDOR	P1	YES	YES	NO	YES	NO	THIS ZONE SHALL HAVE ONE MASTER ON/OFF OVERRIDE SWITCH LOCATED WITHIN THE ZONE AND ONE DIMMER OVERRIDE SWITCH LOCATED IN THE WEST AS NOTED ON PLANS.
3-10 thru 3-50	OPEN OFFICE DAYLIGHTING	A	NO	NO	YES	YES	YES	DAYLIGHTING SENSOR SHALL FUNCTION AS A PHOTOCELL DURING THE NORMAL HOURS OF OPERATION AND AS AN OCCUPACNY SENSOR AFTER HOURS.

NOTES:
1. *ALL LIGHTING IS CONTROLLED VIA TIMECLOCK ON AND TIMECLOCK OFF WITH OVERRIDE AS DESCRIBED IN COMMENTS ABOVE. CONTRACTOR SHALL COORDINATE NORMAL HOURS OF OPERATION WITH OWNER.
2. NIGHT LIGHTS IN CONTROLLED AREAS SHALL ALWAYS BE AT 100% BRIGHTNESS.
3. OVERRIDE SWITCH ID SHALL BE THE SAME AS THE CONTROL ZONE AS NOTED ON PLANS.
4. ALL OVERRIDE SWITCHES AND SENSORS FOR OPEN OFFICE AREAS LISTED ABOVE SHALL BE BATTERY OPERATED. THEY SHALL CONTROL THE LIGHTING FIXTURES VIA WIRELESS CONTROL AND nECY LIGHTING CONTROLLER.

2 OPEN OFFICE AREA LIGHTING CONTROL SCHEDULE

E6-1-03 SCALE: N.T.S.

Building Inspection Division
City of Lakeland
THESE PLANS HAVE BEEN REVIEWED FOR COMPLIANCE WITH THE CURRENT EDITION OF THE FLORIDA BUILDING CODE
Date: 11/15/19
Permit Number: BLD19-06035

AECOM
BATSON-COOK CONSTRUCTION

PROJECT

PUBLIX HEADQUARTERS BUILDING ADDITION AND PARKING LOT EXPANSION

3300 PUBLIX CORPORATE PARKWAY
LAKELAND, FL 33811

CLIENT

Publix

3300 PUBLIX CORPORATE PARKWAY
LAKELAND, FL 33811

www.publix.com

CONSULTANT

AECOM

AECOM TECHNICAL SERVICES, INC.
800 Douglas Entrance
North Tower, 2nd Floor
Coral Gables, FL 33134
305.444.4691 tel 305.447.3580 fax
www.aecom.com

ARCHITECTURE
LICENSE NO. AA26000687

ENGINEERING
CA LIC. NO. 8115

http://www.aecom.com

REGISTRATION

HENRYK B. JUSZCZYK LICENSE NO. 58082 STATE OF FLORIDA PROFESSIONAL ENGINEER

HENRYK B. JUSZCZYK, PROFESSIONAL ENGINEER, STATE OF FLORIDA, LICENSE NO. 58082

THIS ITEM HAS BEEN DIGITALLY SIGNED AND SEALED BY HENRYK B. JUSZCZYK, PROFESSIONAL ENGINEER, STATE OF FLORIDA, LICENSE NO. 58082 ON THE DATE INDICATED HERE. PRINTED COPIES OF THIS DOCUMENT ARE NOT CONSIDERED SIGNED AND SEALED AND THE SIGNATURE MUST BE VERIFIED ON ANY ELECTRONIC COPIES.

Henryk B Juszczyk
2019.09.30
18:14:15 -04'00'

NOTICE: THE OFFICIAL RECORD OF THIS SHEET IS THE ELECTRONIC FILE SIGNED AND SEALED UNDER RULE 61G15-23.004, F.A.C.

ISSUE/REVISION

I/R	DATE	DESCRIPTION
1	SEP 30, 2019	100% CONSTRUCTION DOCUMENTS

PROJECT NUMBER

60601397

SHEET TITLE

ELECTRICAL DETAILS

SHEET NUMBER

E6-1-03

©2016 AECOM Corporation

Printed on ___% Post-Consumer Recycled Content Paper

Last Plotted: 9/30/2019 5:05:48 PM
Filename: BM-300\60601397-Publix HQ\60601397_Publix HQ_ELECT_R2019.rvt